19-2196; Rev 0; 10/01

MAXIM

32-Tap Audio Logarithmic Taper Digital Potentiometer

MAX5407

General Description

The MAX5407 SOT-PoT™ is a logarithmic taper digital potentiometer with 32 tap points that has 1dB steps between taps. This device is ideal for audio applications, such as volume control and fading/balancing audio signals.

The MAX5407 consists of a resistor string and CMOS switches that are digitally controlled through a simple 2-wire serial interface. This device performs the same function as a mechanical potentiometer. The device has a fixed end-to-end resistance of 20kΩ and features zero-crossing detection to minimize the audible noise generated by the wiper transitions.

This device has nominal resistor temperature coefficients of 35ppm/°C end-to-end and 5ppm/°C ratiometric. The MAX5407 is available in a space saving 8-pin SOT23 package and is guaranteed from -40°C to +85°C.

Features

- ♦ **Miniature 3mm x 3mm 8-Pin SOT23 Package**
- ♦ **Logarithmic Taper with 1dB Steps Between Taps**
- ♦ **32 Tap Positions**
- ♦ **Low 0.35µA Supply Current**
- ♦ **+2.7V to +5.5V Single-Supply Operation**
- ♦ **Zero-Crossing Detection to Minimize Audible Clicks During Wiper Transitions**
- ♦ **Simple Up/Down 2-Wire Serial Data Interface**
- ♦ **Power-On Reset**
  Wiper Goes To Maximum Attenuation (Lowest Tap Position)
- ♦ **20kΩ End-to-End Resistance**

Applications

Audio Volume Control

Fading/Balancing Audio Signals

Mechanical Potentiometer Replacement

Ordering Information

PART	TEMP. RANGE	PIN-PACKAGE	TOP MARK
MAX5407EKA	-40°C to +85°C	8 SOT23	AAID

Functional Diagram

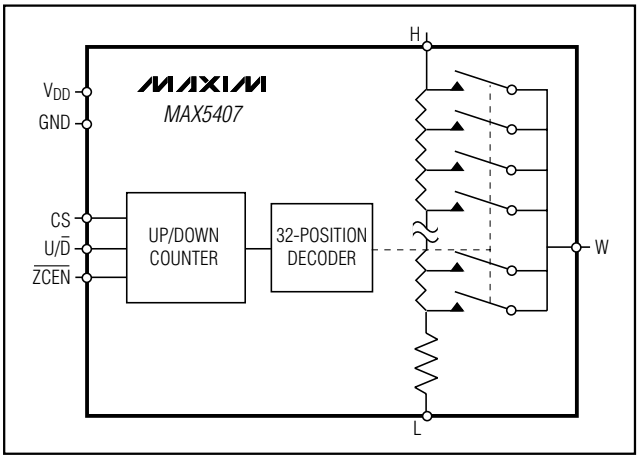

Pin Configuration

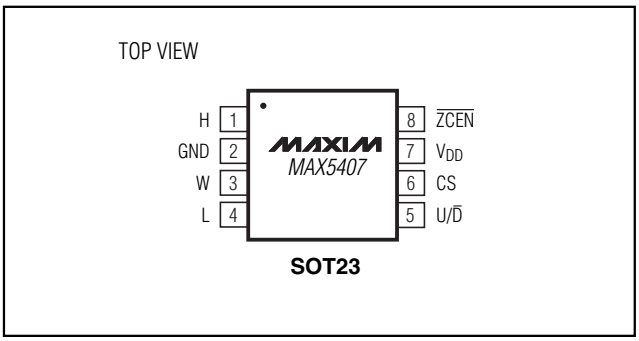

SOT-PoT is a trademark of Maxim Integrated Products, Inc.

For pricing, delivery, and ordering information, please contact Maxim/Dallas Direct! at 1-888-629-4642, or visit Maxim's website at www.maxim-ic.com.

32-Tap Audio Logarithmic Taper Digital Potentiometer

ABSOLUTE MAXIMUM RATINGS

V_{DD} to GND .....-0.3V to +6V
H, W, L, CS, $\overline{ZCEN}$, and U/$\overline{D}$ to GND .....-0.3V to (V_{DD} + 0.3V)
Input and Output Latchup Immunity.....±200mA
Maximum Continuous Current into H, L, and W .....±500µA
Continuous Power Dissipation (T_A = +70°C)
8-Pin SOT23-8 (derate 8.9mW/°C above +70°C) 714mW

Operating Temperature Range .....-40°C to +85°C
Junction Temperature.....+150°C
Storage Temperature Range .....-65°C to +150°C
Soldering Temperature (soldering, 10s).....+300°C

Stresses beyond those listed under "Absolute Maximum Ratings" may cause permanent damage to the device. These are stress ratings only, and functional operation of the device at these or any other conditions beyond those indicated in the operational sections of the specifications is not implied. Exposure to absolute maximum rating conditions for extended periods may affect device reliability.

ELECTRICAL CHARACTERISTICS

(V_{DD} = +2.7V to +5.5V, V_H = V_{DD}, V_L = 0, T_A = T_{MIN} to T_{MAX}, unless otherwise noted. Typical values are at V_{DD} = +5V and T_A = +25°C.) (Note 1)

PARAMETER	SYMBOL	CONDITIONS	MIN	TYP	MAX	UNITS
Number of Resistor Taps			32			Taps
End-to-End Resistance			15	20	25	kΩ
Bandwidth (Note 2)		(Notes 3, 4)		500		kHz
Absolute Tolerance (Note 5)		(Note 3)		±0.25	±1	dB
Tap-to-Tap Tolerance (Note 6)		(Note 3)		±0.05	±0.1	dB
Total Harmonic Distortion + Noise	THD + N	V_{IN} = 1V_{RMS}, f = 1kHz, Tap = -6dB (Notes 3, 4)		0.002		%
Power-Supply Rejection Ratio	PSRR			-80		dB
End-to-End Resistance Temperature Coefficient	TC_R			35		ppm/°C
Ratiometric Resistance Temperature Coefficient				5		ppm/°C
Wiper Resistance	R_W	V_{DD} = 2.7V		400	1700	Ω
DIGITAL INPUTS						
Input High Voltage	V_{IH}		2.4			V
Input Low Voltage	V_{IL}				0.8	V
Input Leakage Current					±1	µA
Input Capacitance				5		pF
TIMING CHARACTERISTICS (Figures 1, 2)						
U/$\overline{D}$ Mode to CS Setup	t_{CU}		25			ns
CS to U/$\overline{D}$ Step Setup	t_{CI}		25			ns
CS to U/$\overline{D}$ Step Hold	t_{IC}		25			ns
U/$\overline{D}$ Step Low Period	t_{IL}		25			ns
U/$\overline{D}$ Step High Period	t_{IH}		25			ns
Up/Down Toggle Rate	f_{TOGGLE}				7	MHz
Wiper Switching Time	t_{IW}	Zero-crossing detection disabled (Note 4)		0.1		µs
Zero-Crossing Timeout				50		ms

ELECTRICAL CHARACTERISTICS (continued)

(V_{DD} = +2.7V to +5.5V, V_H = V_{DD}, V_L = 0, T_A = T_{MIN} to T_{MAX}, unless otherwise noted. Typical values are at V_{DD} = +5V and T_A = +25°C.) (Note 1)

PARAMETER	SYMBOL	CONDITIONS		MIN	TYP	MAX	UNITS
POWER SUPPLIES							
Supply Voltage	V_{DD}			2.7		5.5	V
Supply Current	I_{DD}	All digital inputs are set to 0	Active (Note 7)		100		µA
			Standby (Note 8)		0.35	1	

Note 1: All devices are 100% production tested at T_A = +25°C and guaranteed by design for T_A = T_{MIN} to T_{MAX}.
Note 2: Bandwidth is measured from H to W at the -6dB wiper tap position (see *Typical Operating Characteristics*).
Note 3: These specifications are only valid for I_W less than 100nA of continuous wiper current.
Note 4: Measured with 20pF load capacitor.
Note 5: Absolute tolerance is defined as the variation of the attenuation for any given tap from its expected value.
Note 6: Tap-to-tap tolerance is defined as the variation between any two adjacent taps from the typical value of 1dB.
Note 7: Supply current when f_{TOGGLE} = 2MHz.
Note 8: Supply current when wiper position is not changing.

Typical Operating Characteristics

(V_{DD} = +5V, T_A = +25°C, unless otherwise noted.)

WIPER RESISTANCE vs. WIPER VOLTAGE

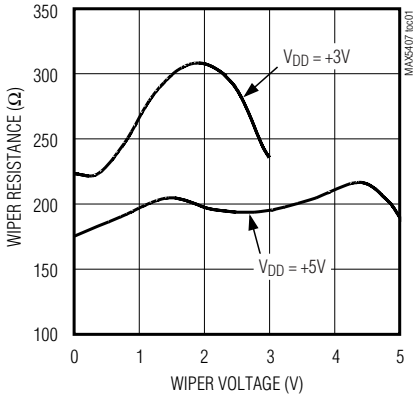

END-TO-END RESISTANCE % CHANGE vs. TEMPERATURE

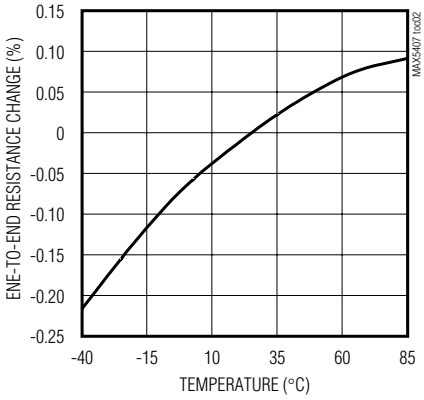

ATTENUATION vs. TAP POSITION

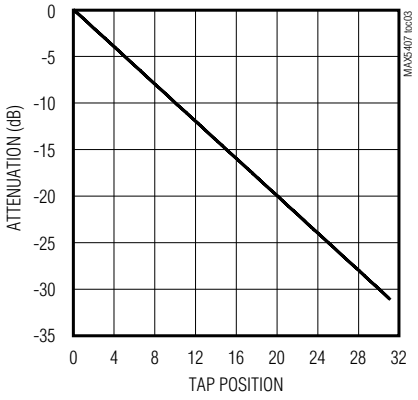

32-Tap Audio Logarithmic Taper Digital Potentiometer

Typical Operating Characteristics (continued)

(V_{DD} = +5V, T_A = +25°C, unless otherwise noted.)

SUPPLY CURRENT vs. TEMPERATURE

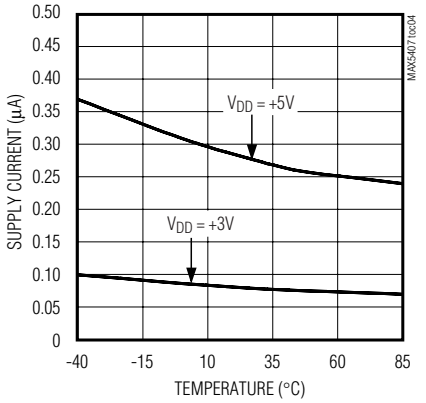

TAP-TO-TAP SWITCHING TRANSIENT

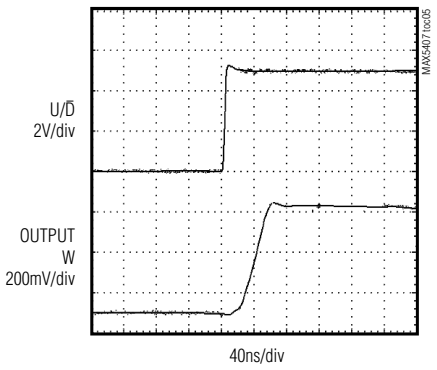

STANDBY SUPPLY CURRENT vs. SUPPLY VOLTAGE

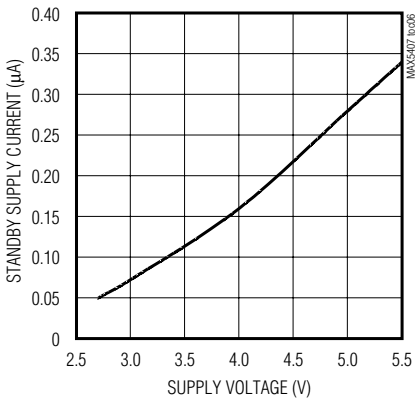

FREQUENCY RESPONSE

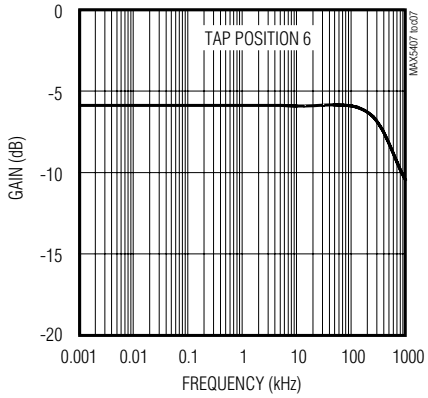

TOTAL HARMONIC DISTORTION + NOISE vs. FREQUENCY

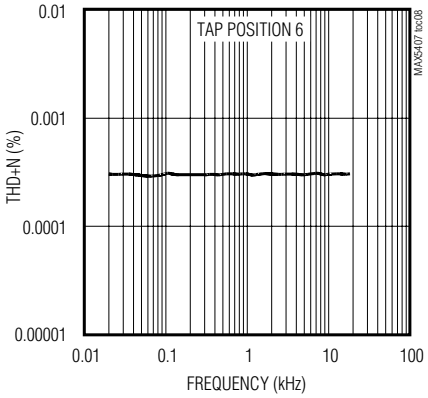

Pin Description

PIN	NAME	FUNCTION
1	H	High Terminal of Resistor
2	GND	Ground
3	W	Wiper Terminal of Resistor
4	L	Low Terminal of Resistor
5	U/$\overline{D}$	Up/Down Control Input. With CS high, a low-to-high transition increments or decrements the wiper position, depending on the mode.
6	CS	Chip-Select Input. A low-to-high CS transition determines the mode: increment if U/$\overline{D}$ is high, decrement if U/$\overline{D}$ is low.
7	V_{DD}	Power Supply
8	$\overline{ZCEN}$	Zero-Crossing Detection Enable Input. Set to low to enable zero-crossing detection.

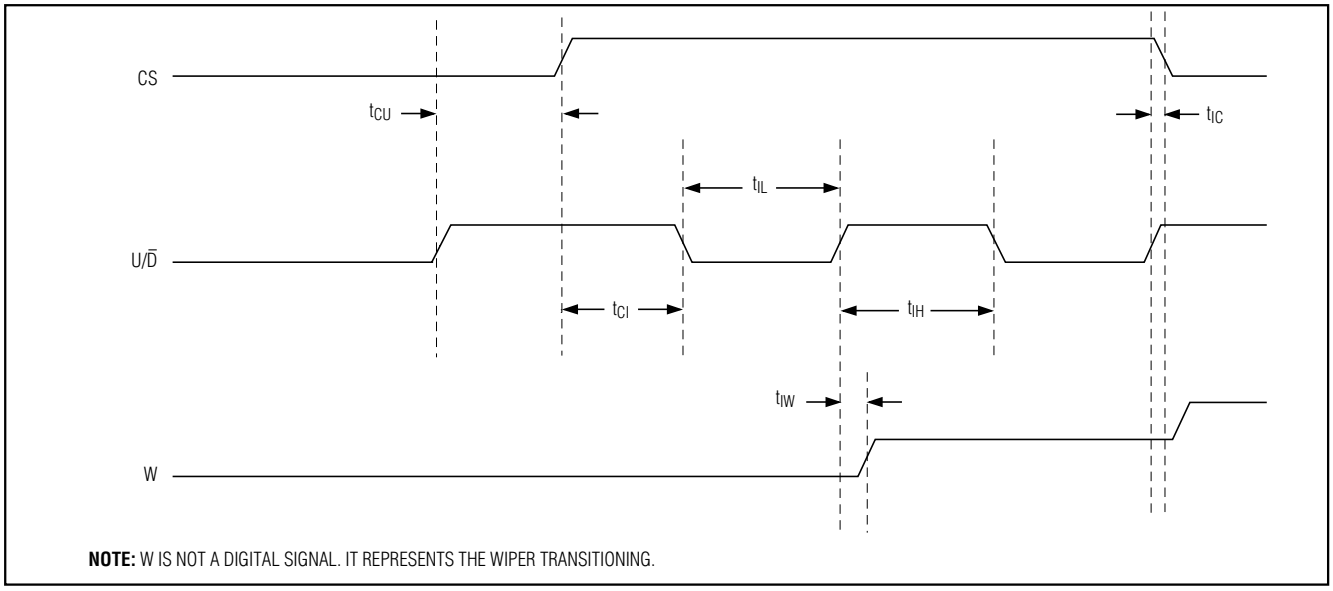

Figure 1. Serial Interface Timing Diagram, Increment Mode

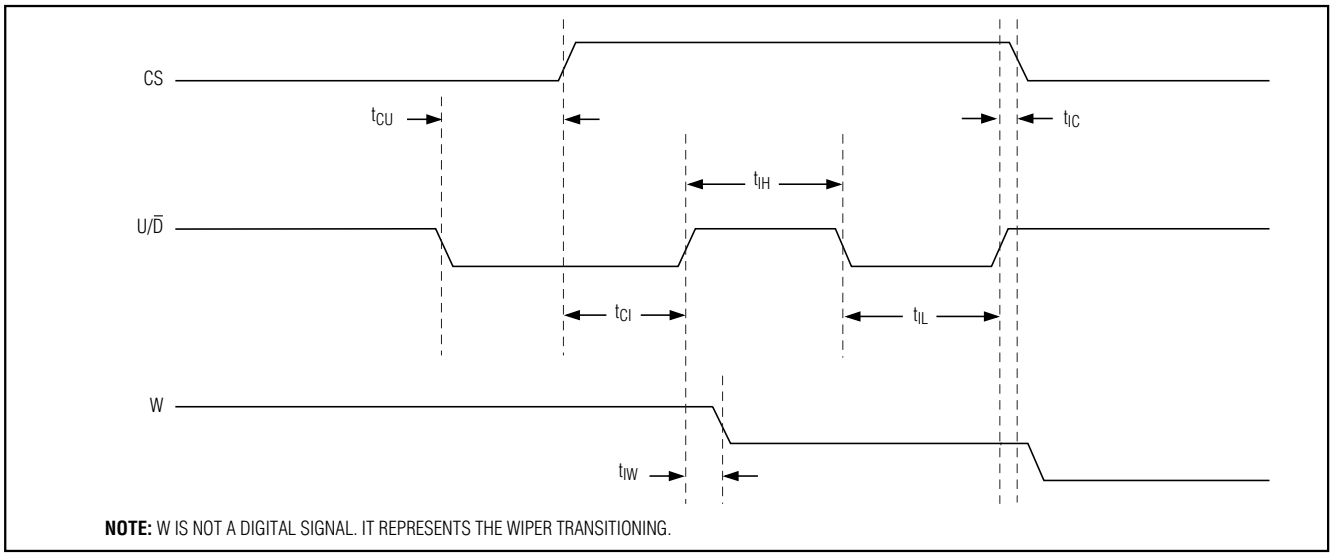

Figure 2. Serial Interface Timing Diagram, Decrement Mode

Detailed Description

Digital Interface Operation

The MAX5407 has two modes of operation when the serial interface is active: increment and decrement mode. The serial interface is only active when CS is high.

The CS and U/$\overline{D}$ inputs control the position of the wiper along the resistor array. When CS transitions from low to high, the part will go into increment mode if U/$\overline{D}$ is high and into decrement mode if U/$\overline{D}$ is low. Once the mode is set, the device will remain in that mode until CS goes low again. A low-to-high transition at the U/$\overline{D}$ pin will increment or decrement the wiper position depending on the mode (Figures 1 and 2).

When the CS input transitions to low (serial interface inactive), the value of the counter is stored and the wiper position is maintained.

32-Tap Audio Logarithmic Taper Digital Potentiometer

Power-On Reset

The power-on reset feature sets the wiper to the maximum attenuation (tap position 31, -31dB) at power-up. If CS is initially high, the MAX5407 is in the increment mode by default.

Zero-Crossing Detection

When the $\overline{ZCEN}$ input is low, the zero-crossing detect feature is enabled. This feature reduces the audible noise ("clicks and pops") that result from wiper transitions. When zero-crossing detection is enabled, the wiper changes position only when the voltage at L is the same as the voltage at H. If no zero crossing is detected after 50ms, the device will timeout and change the wiper position.

Digital Logic Inputs

The MAX5407 can interface to +3V logic as well as +5V logic, while using a +3V to +5V power supply. In order to minimize the supply current, set all digital inputs low while the part is inactive.

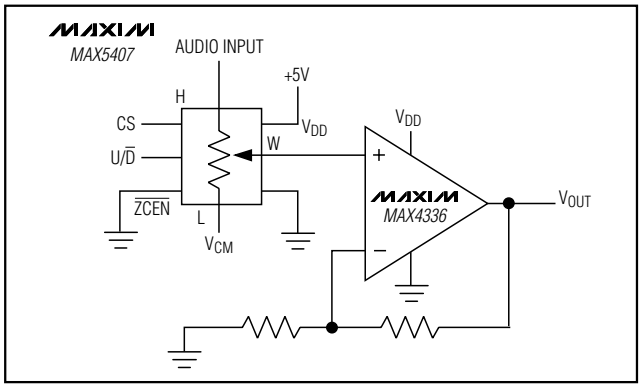

Figure 3. Volume Control Circuit

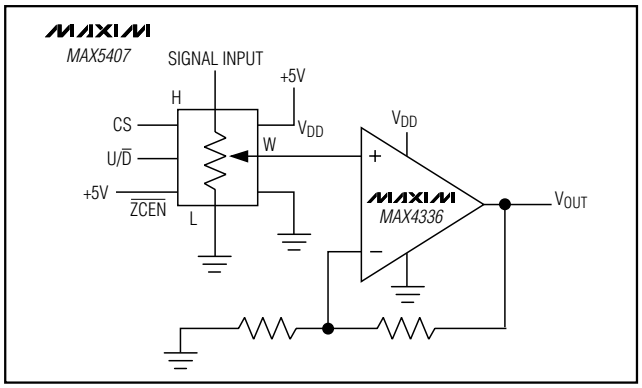

Figure 4. Signal Attenuator Circuit

Applications Information

The MAX5407 is intended for circuits requiring digitally controlled adjustable voltage or adjustable gain, such as applications involving volume control.

Volume Control

The zero-crossing feature of the MAX5407 makes it ideal for applications involving volume control. Figure 3 shows a typical application circuit, where the MAX5407 is followed by an op amp for output buffering and gain. V_{CM} represents the common voltage around which the audio signal swings.

Signal Attenuator

Figure 4 shows a typical signal attenuator. Use an op amp to provide buffering and gain to the output of the MAX5407. Connect the MAX5407 to the positive input of a noninverting op amp to select the level of attenuation of the input signal, by digitally controlling the wiper terminal.

Adjustable Gain

Figure 5 shows how to use the MAX5407 to digitally adjust the gain of a noninverting op amp configuration. The MAX5407 has a low 5ppm/°C ratiometric tempco that allows for a very stable adjustable gain configuration over temperature.

Chip Information

TRANSISTOR COUNT: 1942

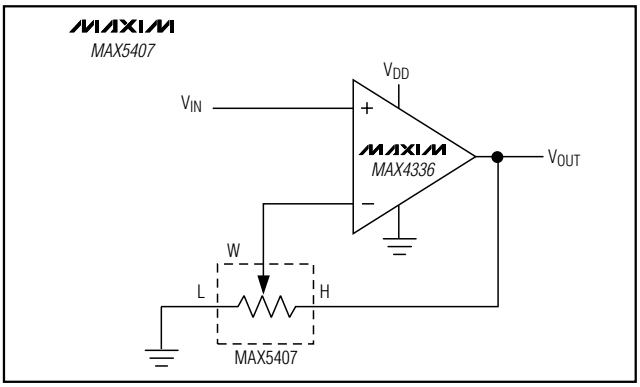

Figure 5. Adjustable Gain Circuit

Package Information

SOT23, 8L.EPS

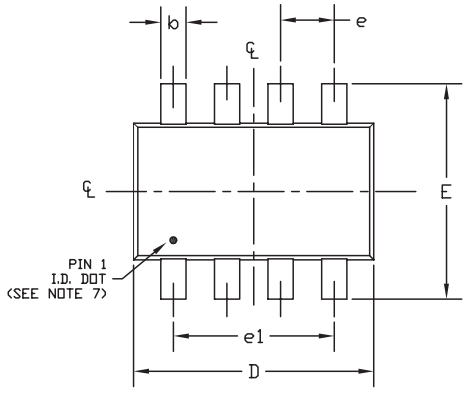

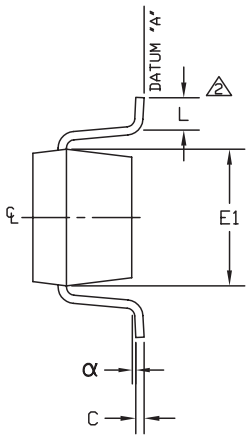

SYMBOL	MIN	MAX
A	0.90	1.45
A1	0.00	0.15
A2	0.90	1.30
b	0.28	0.45
C	0.09	0.20
D	2.80	3.00
E	2.60	3.00
E1	1.50	1.75
L	0.10	0.60
e	0.65 ref	
e1	1.95 ref	
α	0°	10°

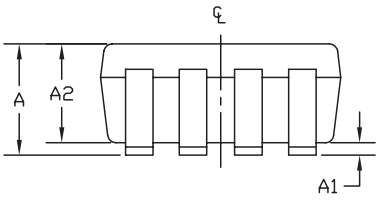

NOTE:
1. ALL DIMENSIONS ARE IN MILLIMETERS.
2. FOOT LENGTH MEASURED REFERENCE TO FLAT FOOT SURFACE PARALLEL TO DATUM "A".
3. PACKAGE OUTLINE EXCLUSIVE OF MOLD FLASH & METAL BURR.
4. PACKAGE OUTLINE INCLUSIVE OF SOLDER PLATING.
5. EIAJ REF. NUMBER" SC-74 (6 LEAD VERSION)
6. COPLANARITY 4 MILS. MAX.
7. PIN 1 I.D. DOT IS 0.3 MM ø MIN. LOCATED ABOVE PIN 1.
8. MEETS JEDEC MO178.

MAXIM
PROPRIETARY INFORMATION

TITLE:
PACKAGE OUTLINE, SOT-23, 8L

APPROVAL	DOCUMENT CONTROL NO.	REV	
	21-0078	C	1/1

Maxim cannot assume responsibility for use of any circuitry other than circuitry entirely embodied in a Maxim product. No circuit patent licenses are implied. Maxim reserves the right to change the circuitry and specifications without notice at any time.

© 2001 Maxim Integrated Products Printed USA MAXIM is a registered trademark of Maxim Integrated Products.